VERSA ASSEMBLY INSTRUCTION
7 CONFIGURATIONS

CONFIGURATION 1
SHORT SINGLE BAY
- PANEL (UP TO 1800mm)
(Refer to Page 2)

CONFIGURATION 2
SHORT SINGLE BAY
- WIRE (UP TO 1800mm)
(Refer to Page 3)

CONFIGURATION 3
TALL SINGLE BAY
(1900 - 2400mm)
(Refer to Page 4)

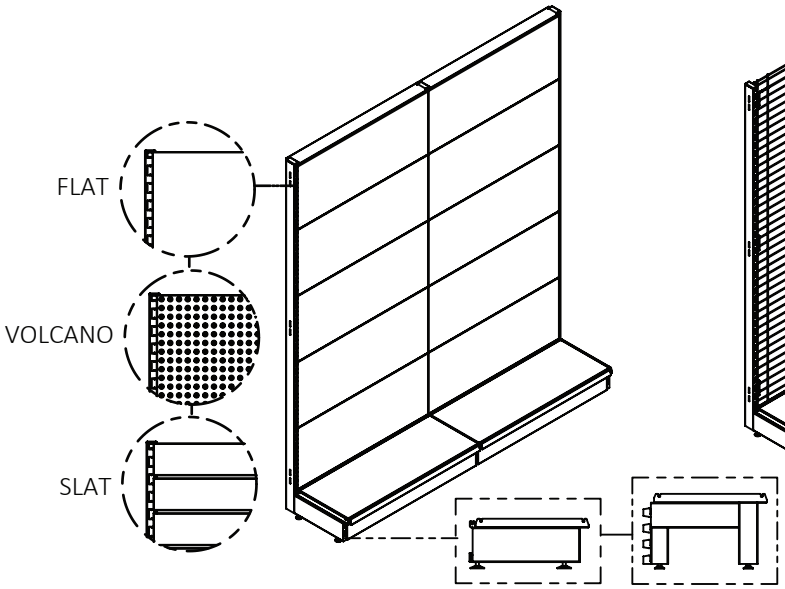

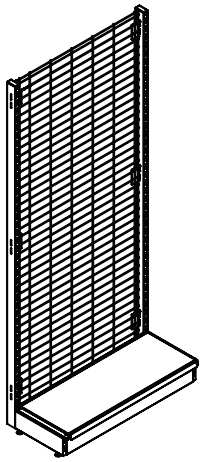

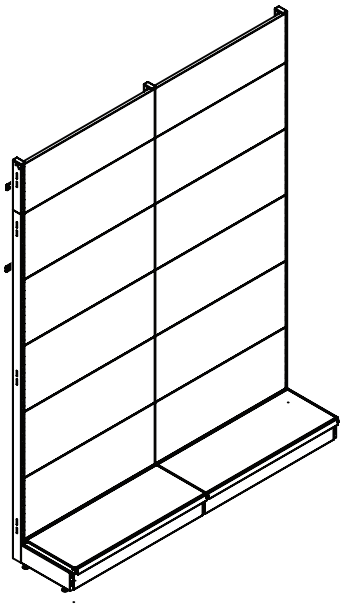

CONFIGURATION 4
DOUBLE BAY
(Refer to Page 5)

CONFIGURATION 5
SINGLE END BAY
(Refer to Page 6)

CONFIGURATION 6
DOUBLE BAY
- END CAP **(Refer to Page 7-8)**

CONFIGURATION 7
CORNER BAY
(Refer to Page 9)

PLEASE NOTE:
CORNER BAY SHOULD BE ASSEMBLED FIRST WHEN POSSIBLE

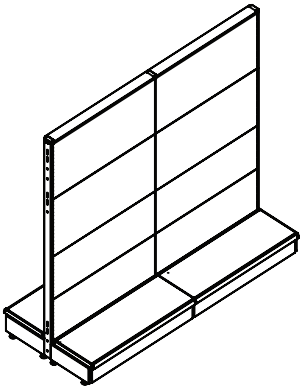

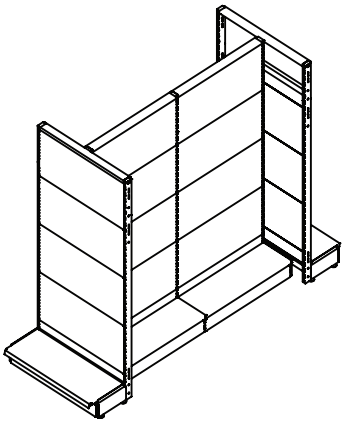

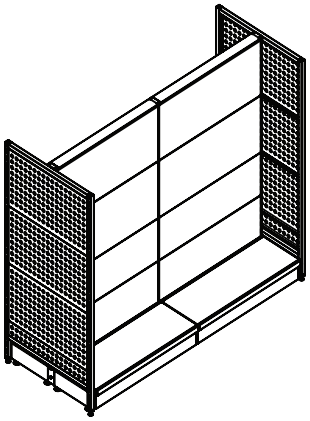

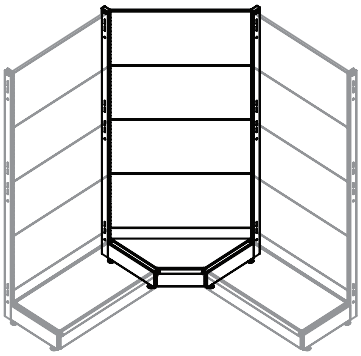

IMPORTANT - FOR YOUR SAFETY

1. 2 people may be required for assembly.
2. Ensure that the floor space required for installation is flat and level.
3. Never use damaged parts.
4. *For Single Sided Bays only*:
Single sided bays should only be placed up against a supporting wall, another Versa Bay, or up against another suitable supporting structure.

SI retail SOLUTIONS IN RETAIL	ASSEMBLY INSTRUCTIONS	**DRAWN BY:** SI RETAIL	**SHEET:** 1/16
	TITLE: VERSA CONFIGURATIONS	**FILE NAME:** -	**REVISION:** B

CONFIGURATION 1
SHORT SINGLE BAY
(UP TO 1800mm)

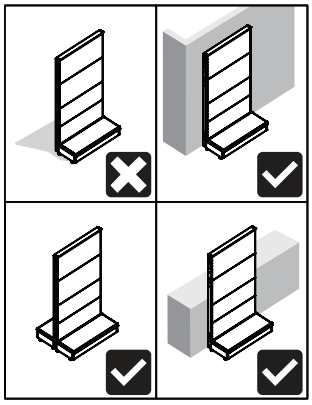

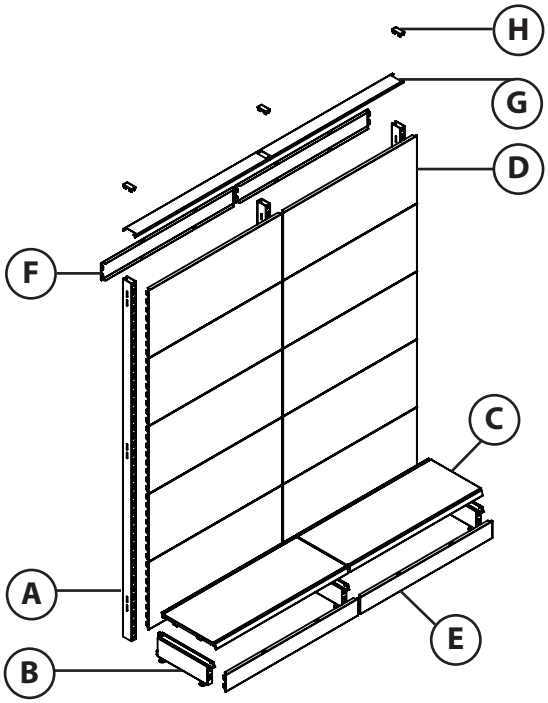

TOOLS REQUIRED:

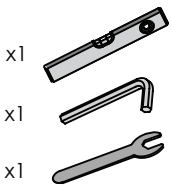

ALL BOLTS WILL BE SUPPLIED

SHORT SINGLE BAY

LETTER	DESCRIPTION
A	UPRIGHT
B	FOOT
C	BASE SHELF
D	BACK PANEL (FRONT)
E	KICK PANEL
F	BACK PANEL (REAR)
G	TOP COVER
H	TOP CAP

PLEASE READ THE STEPS BELOW BEFORE COMMENCING ANY ASSEMBLY

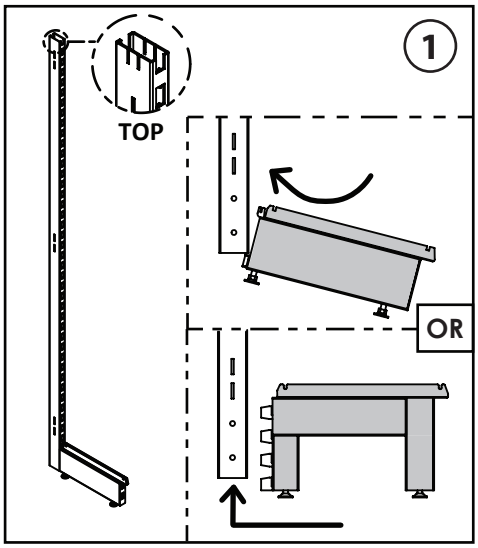

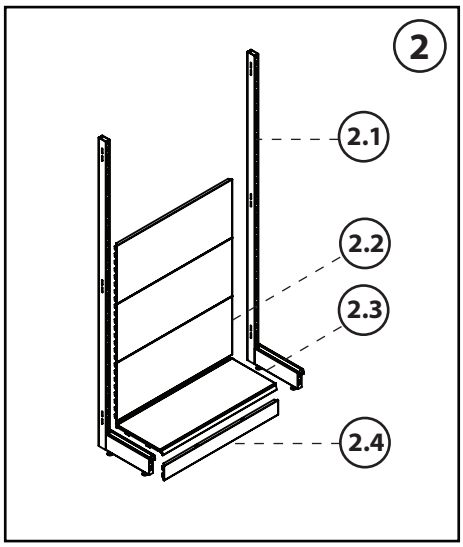

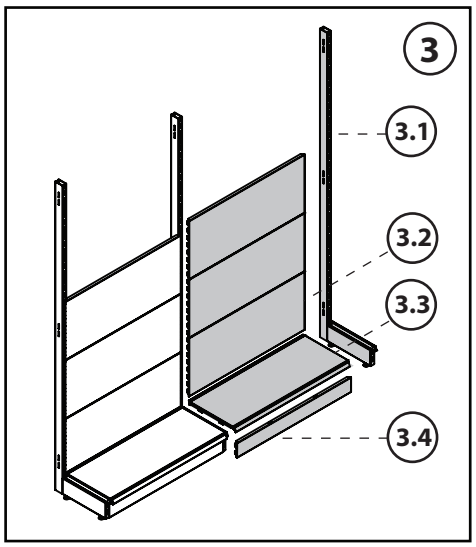

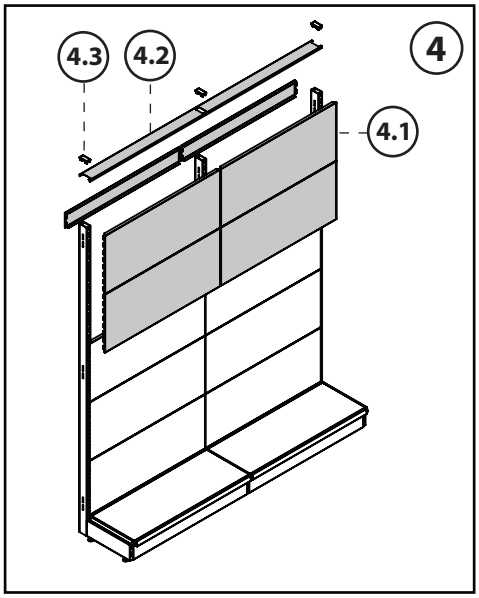

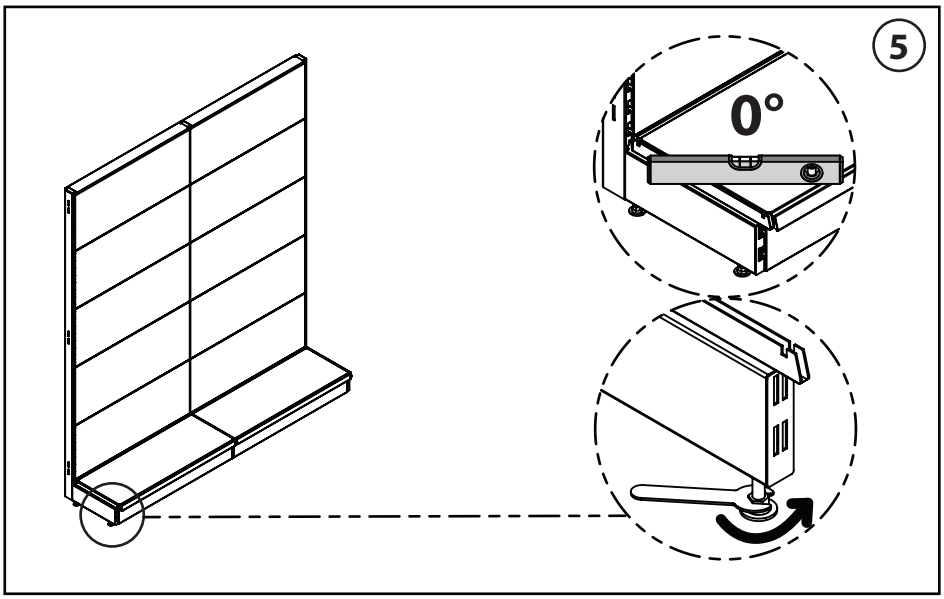

SI retail SOLUTIONS IN RETAIL	ASSEMBLY INSTRUCTIONS	DRAWN BY: SI RETAIL	SHEET: 2/16
	TITLE: VERSA CONFIGURATIONS	FILE NAME: -	REVISION: B

CONFIGURATION 2
SHORT SINGLE BAY WIRE
(UP TO 1800mm)

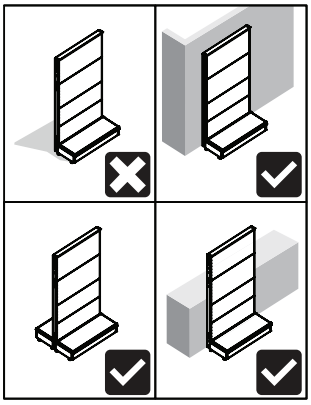

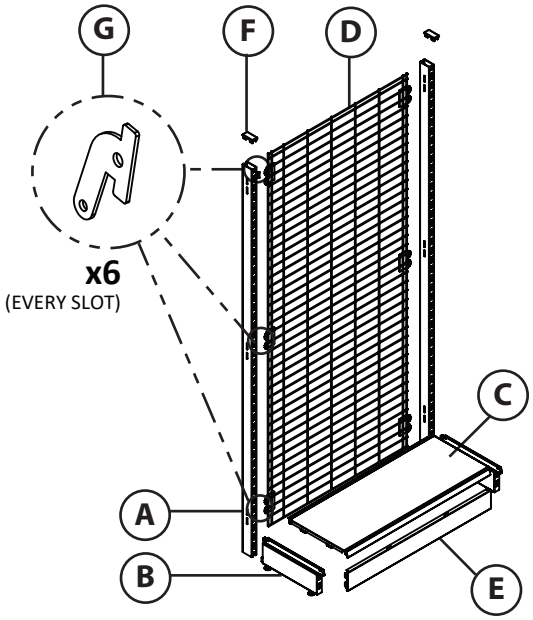

TOOLS REQUIRED:

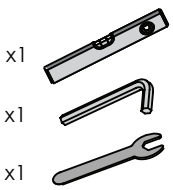

ALL BOLTS WILL BE SUPPLIED

SHORT SINGLE BAY - WIRE

LETTER	DESCRIPTION
A	UPRIGHT
B	FOOT
C	BASE SHELF
D	GRID MESH
E	KICK PANEL
F	TOP CAP
G	LOCKING PIN

PLEASE READ THE STEPS BELOW BEFORE COMMENCING ANY ASSEMBLY

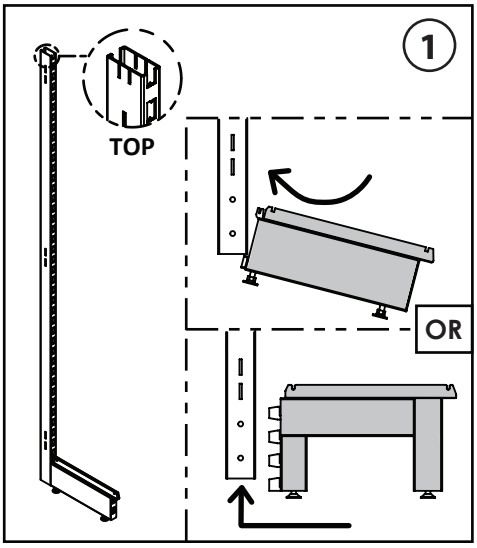

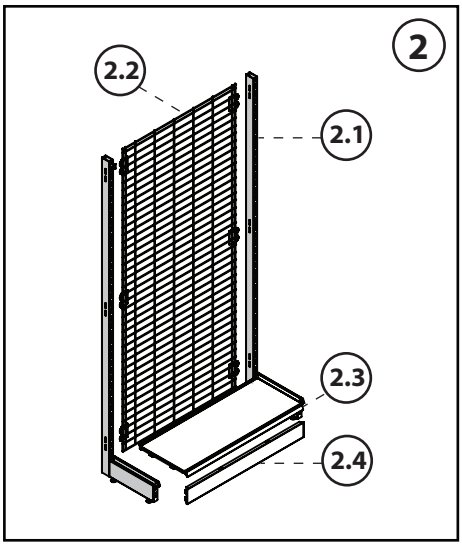

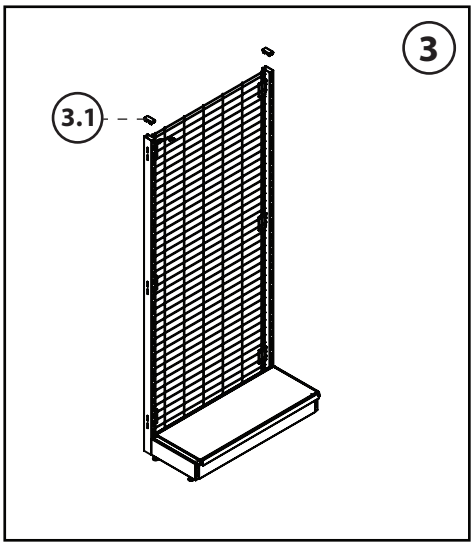

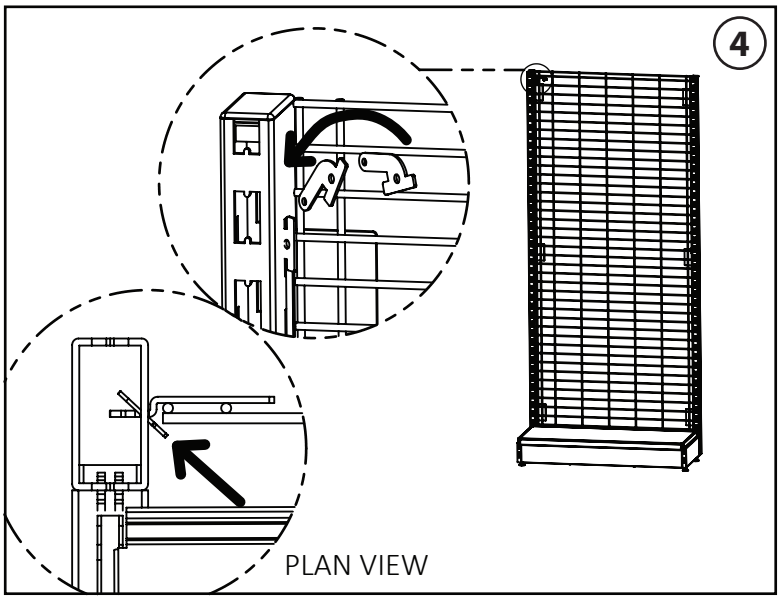

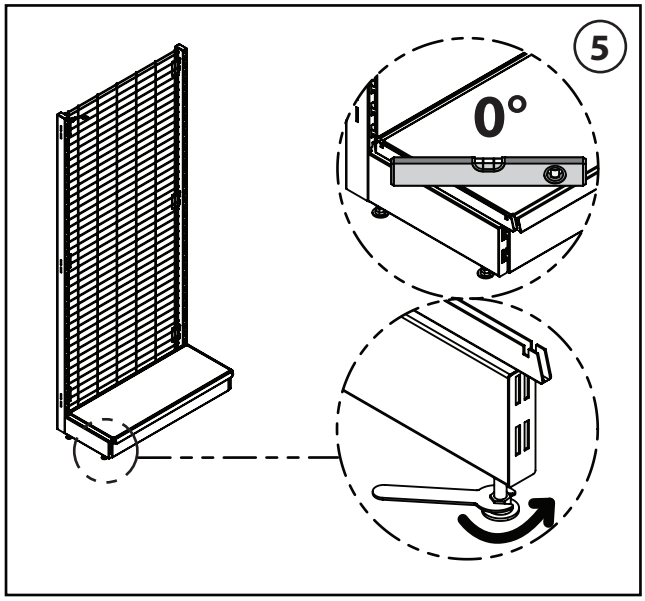

SI RETAIL SOLUTIONS IN RETAIL	ASSEMBLY INSTRUCTIONS	DRAWN BY: SI RETAIL	SHEET: 3/16
	TITLE: VERSA CONFIGURATIONS	FILE NAME: -	REVISION: B

CONFIGURATION 3
TALL SINGLE BAY
(1900-2400mm)

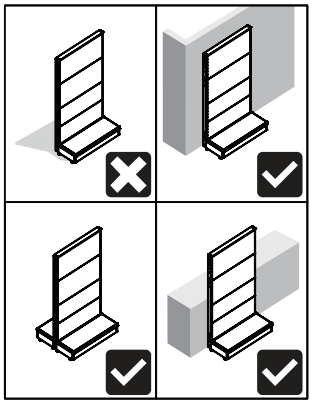

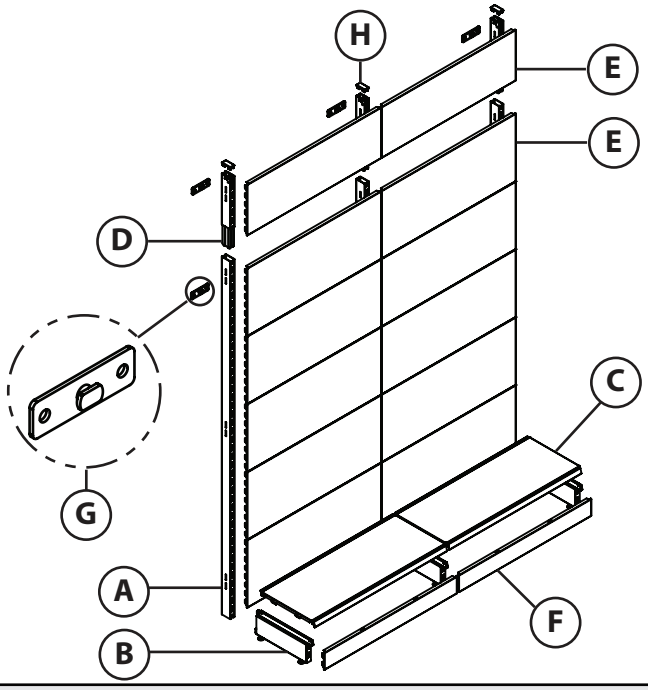

TOOLS REQUIRED:

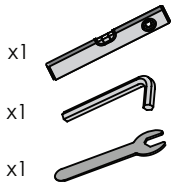

ALL BOLTS WILL BE SUPPLIED

TALL SINGLE BAY

LETTER	DESCRIPTION
A	UPRIGHT
B	FOOT
C	BASE SHELF
D	EXTENSION
E	BACK PANEL
F	KICK PLATE
G	WALL BRACKET
H	TOP CAP

PLEASE READ THE STEPS BELOW BEFORE COMMENCING ANY ASSEMBLY

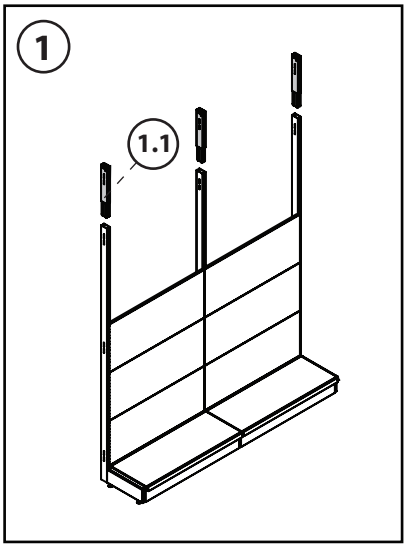

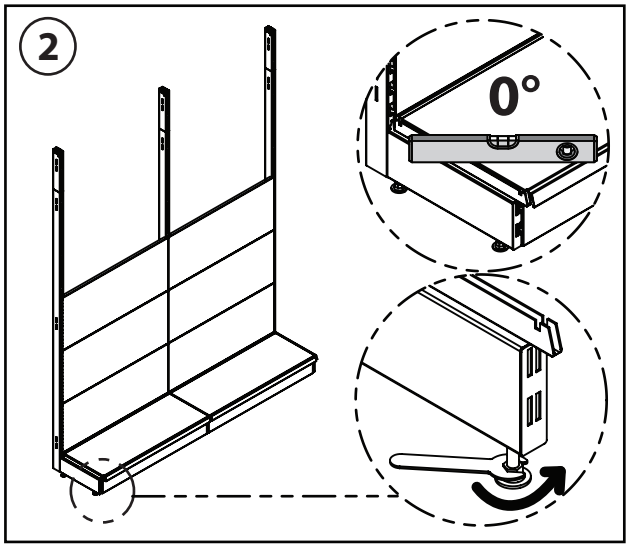

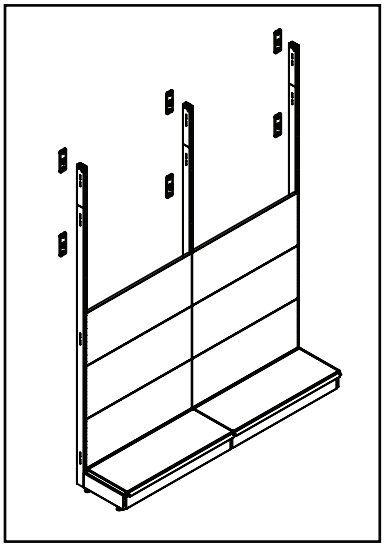

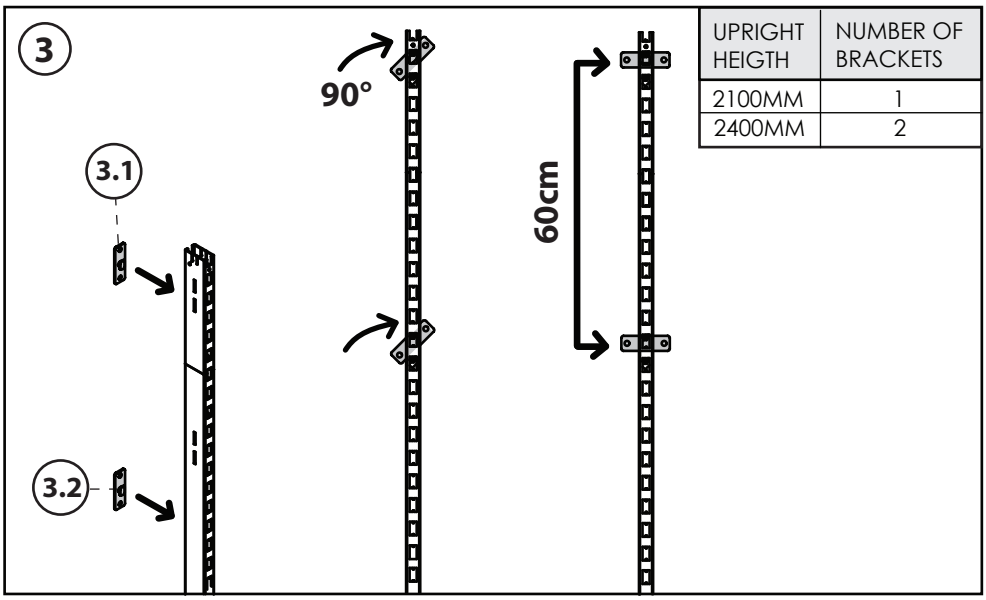

UPRIGHT HEIGTH	NUMBER OF BRACKETS
2100MM	1
2400MM	2

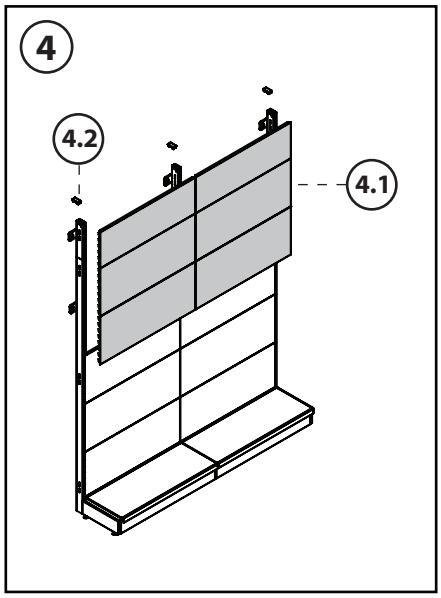

SI retail SOLUTIONS IN RETAIL	ASSEMBLY INSTRUCTIONS	DRAWN BY: SI RETAIL	SHEET: 4/16
	TITLE: VERSA CONFIGURATIONS	FILE NAME: -	REVISION: B

CONFIGURATION 4
DOUBLE BAY

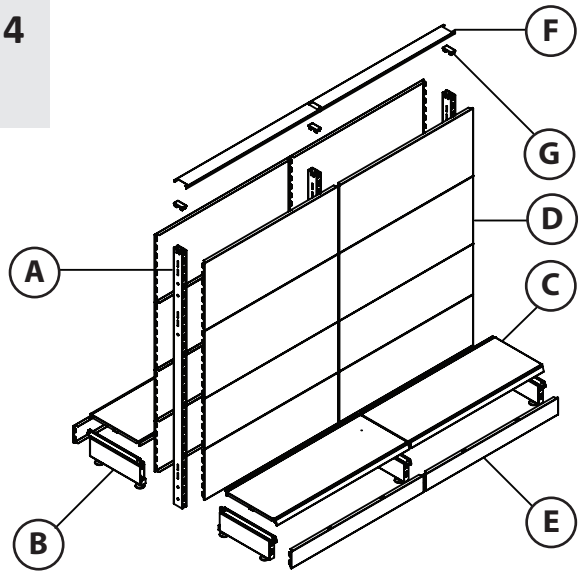

TOOLS REQUIRED:

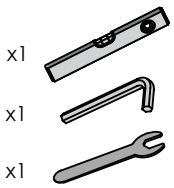

ALL BOLTS WILL BE SUPPLIED

DOUBLE BAY

LETTER	DESCRIPTION
A	UPRIGHT
B	FOOT
C	BASE SHELF
D	BACK PANEL
E	KICK PLATE
F	TOP COVER
G	TOPCAP

PLEASE READ THE STEPS BELOW BEFORE COMMENCING ANY ASSEMBLY

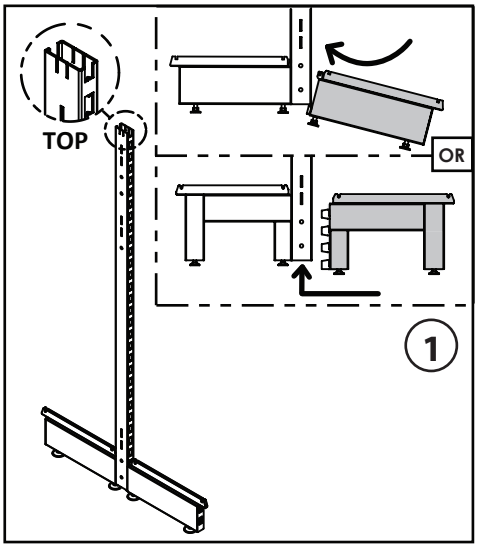

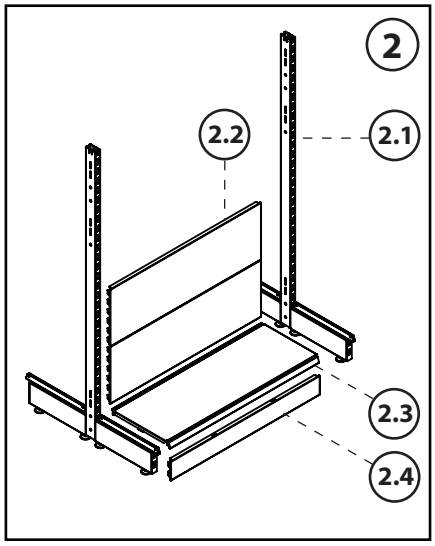

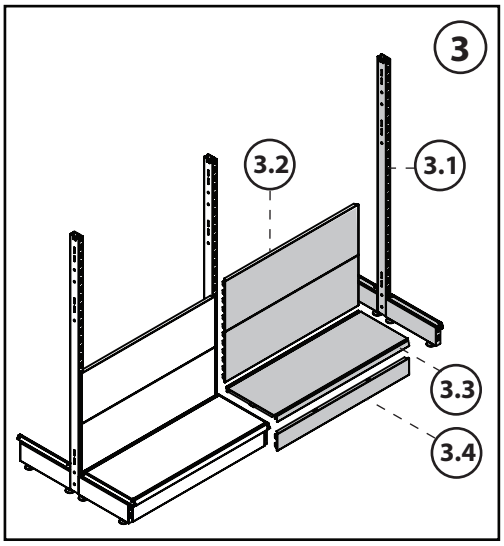

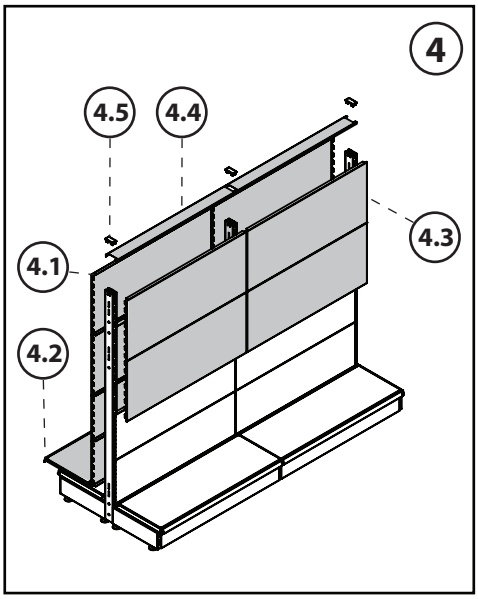

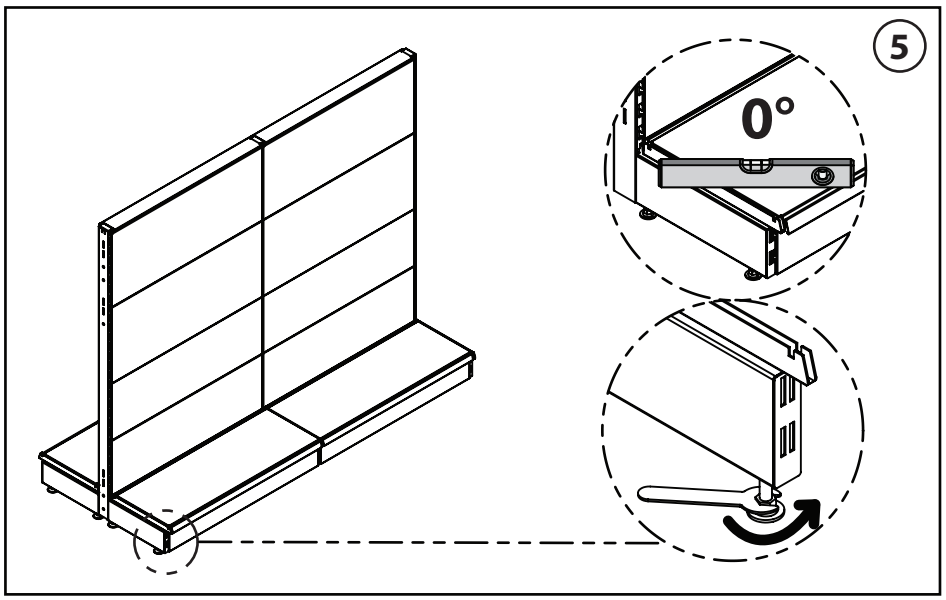

SI retail SOLUTIONS IN RETAIL	ASSEMBLY INSTRUCTIONS	DRAWN BY: SI RETAIL	SHEET: 5/16
	TITLE: VERSA CONFIGURATIONS	FILE NAME: -	REVISION: B

CONFIGURATION 5
SINGLE END BAY
w/ TIE BARS

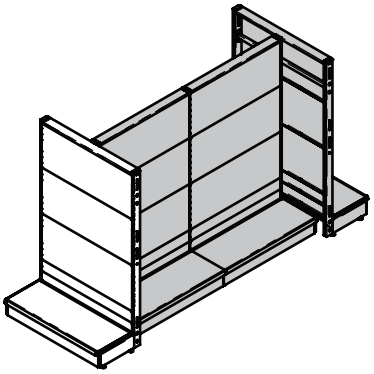

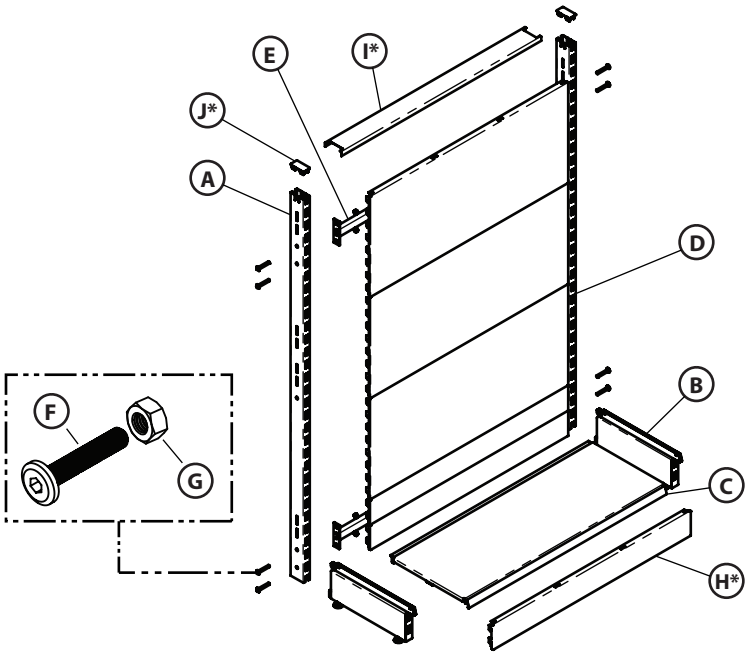

TOOLS REQUIRED:

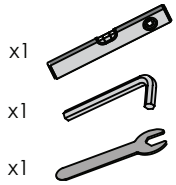

ALL BOLTS WILL BE SUPPLIED

SINGLE END BAY

LETTER	DESCRIPTION
A	UPRIGHT
B	FOOT
C	BASE SHELF
D	BACK PANEL
E	TIE BAR
F	M8x50mm BOLT
G	M8 HEX NUT
H*	KICK PLATE
I*	TOP COVER
J*	POSTCAP

* = OPTIONAL EXTRAS

PLEASE READ THE STEPS BELOW BEFORE COMMENCING ANY ASSEMBLY

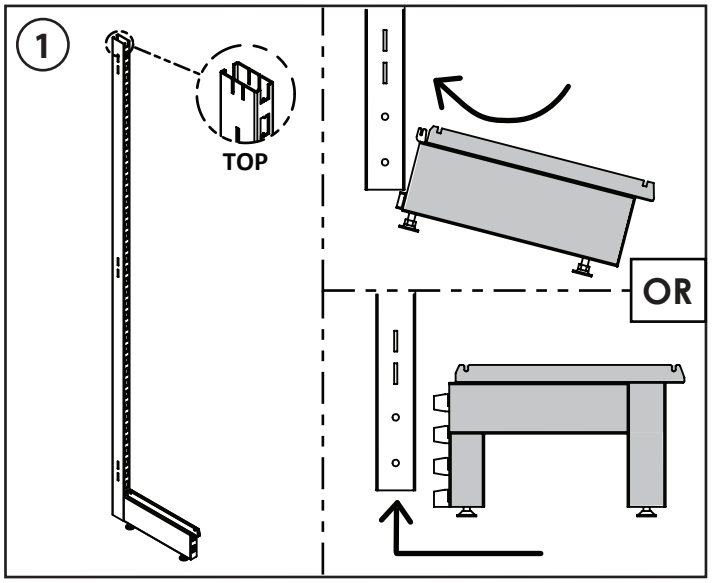

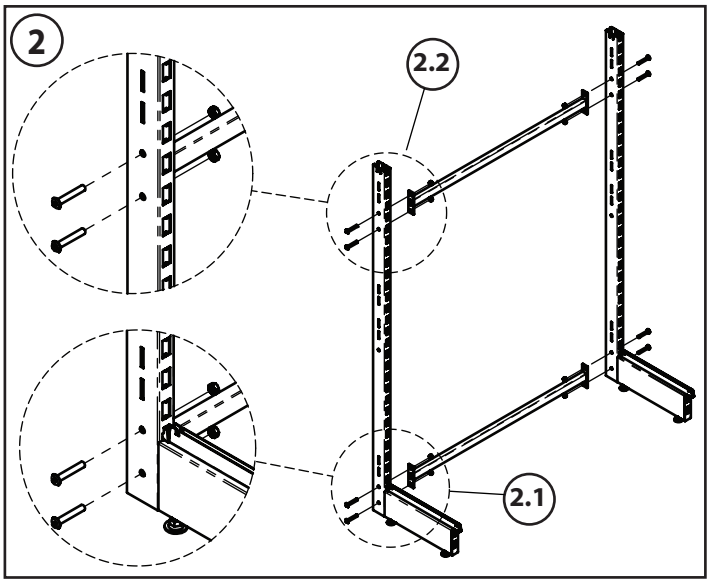

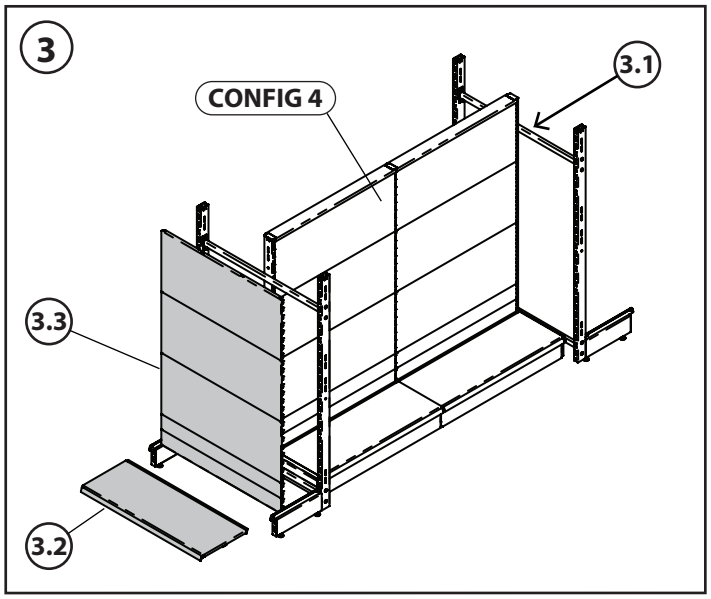

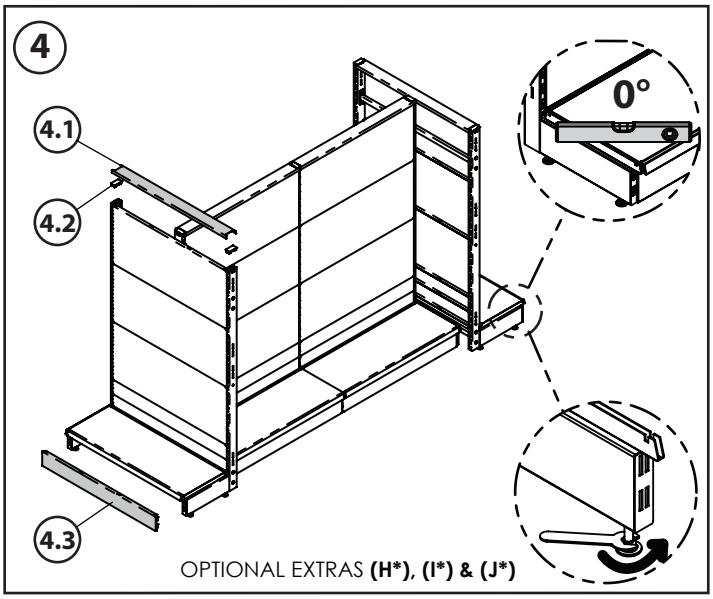

SI retail SOLUTIONS IN RETAIL	ASSEMBLY INSTRUCTIONS	DRAWN BY: SI RETAIL	SHEET: 6/16
	TITLE: VERSA END-BAY CONFIGURATION	FILE NAME: -	REVISION: B

CONFIGURATION 6
DOUBLE BAY
w/ END CAP

TOOLS REQUIRED:

x1

x1

x1

ALL BOLTS WILL BE SUPPLIED

PARTS LIST

LETTER	DESCRIPTION
A	UPRIGHT
B	FOOT
C	BASE SHELF
D	BACK PANEL
E	KICK PLATE
F	TOP COVER
G	TOPCAP
H	WING END
I	TIE BAR
J	TIE BAR BOLT
K	TIE BAR NUT

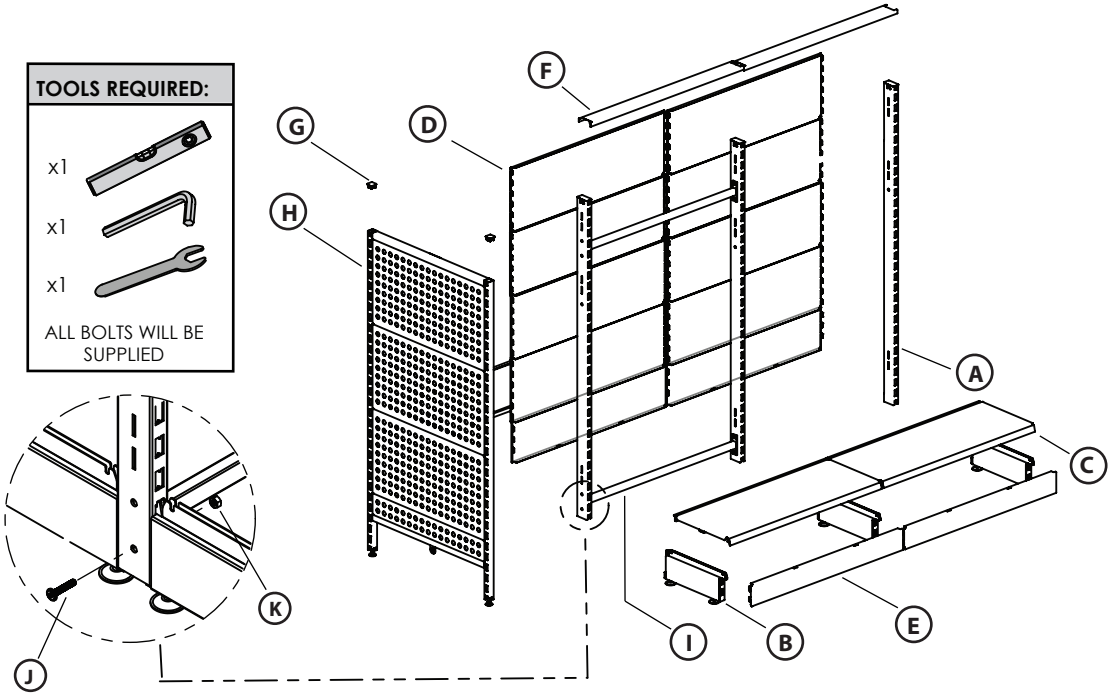

PLEASE READ THE STEPS BELOW BEFORE COMMENCING ANY ASSEMBLY

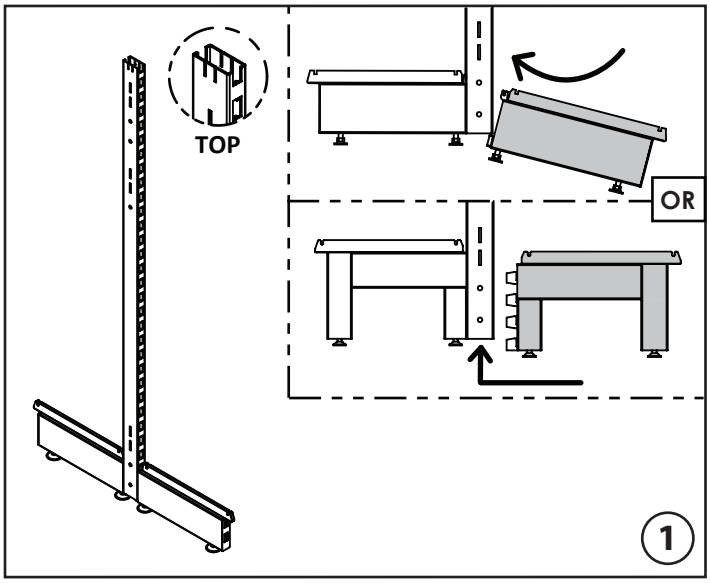

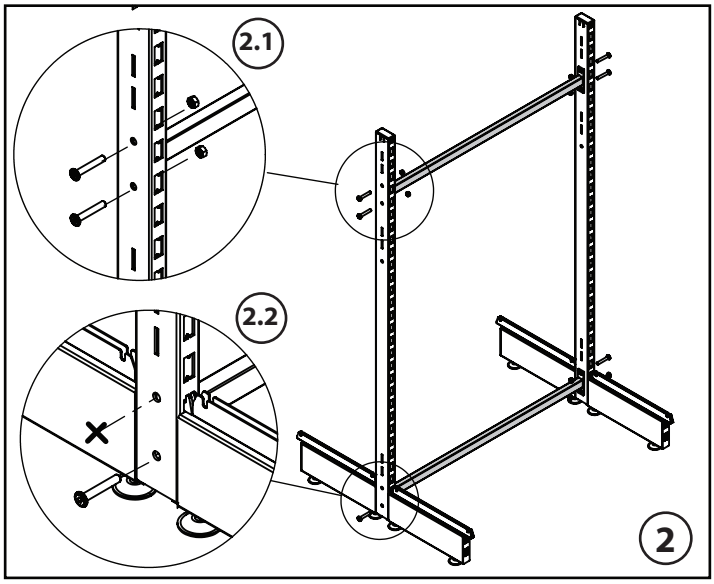

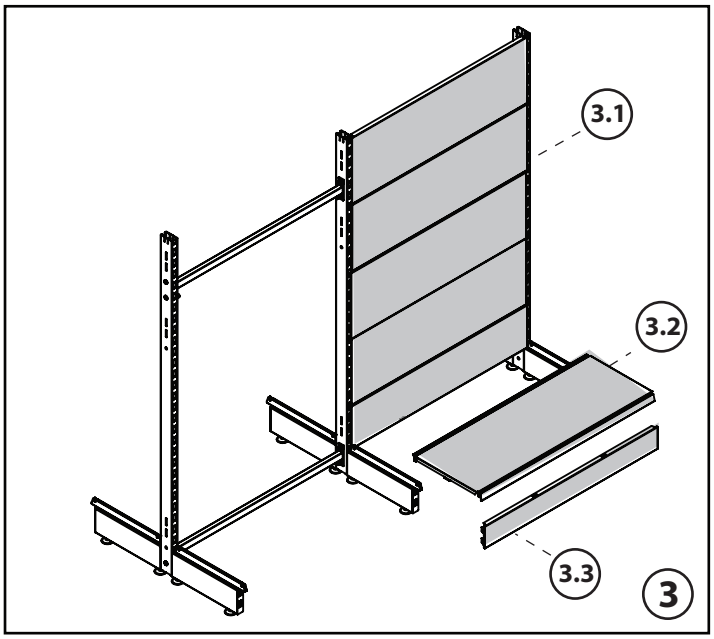

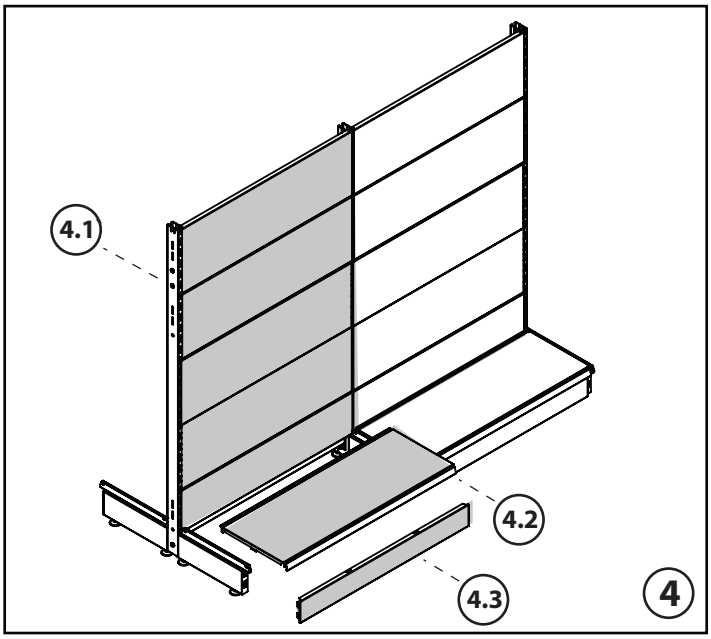

SI retail SOLUTIONS IN RETAIL	ASSEMBLY INSTRUCTIONS	DRAWN BY: SI RETAIL	SHEET: 7/16
	TITLE: VERSA CONFIGURATIONS	FILE NAME: -	REVISION: B

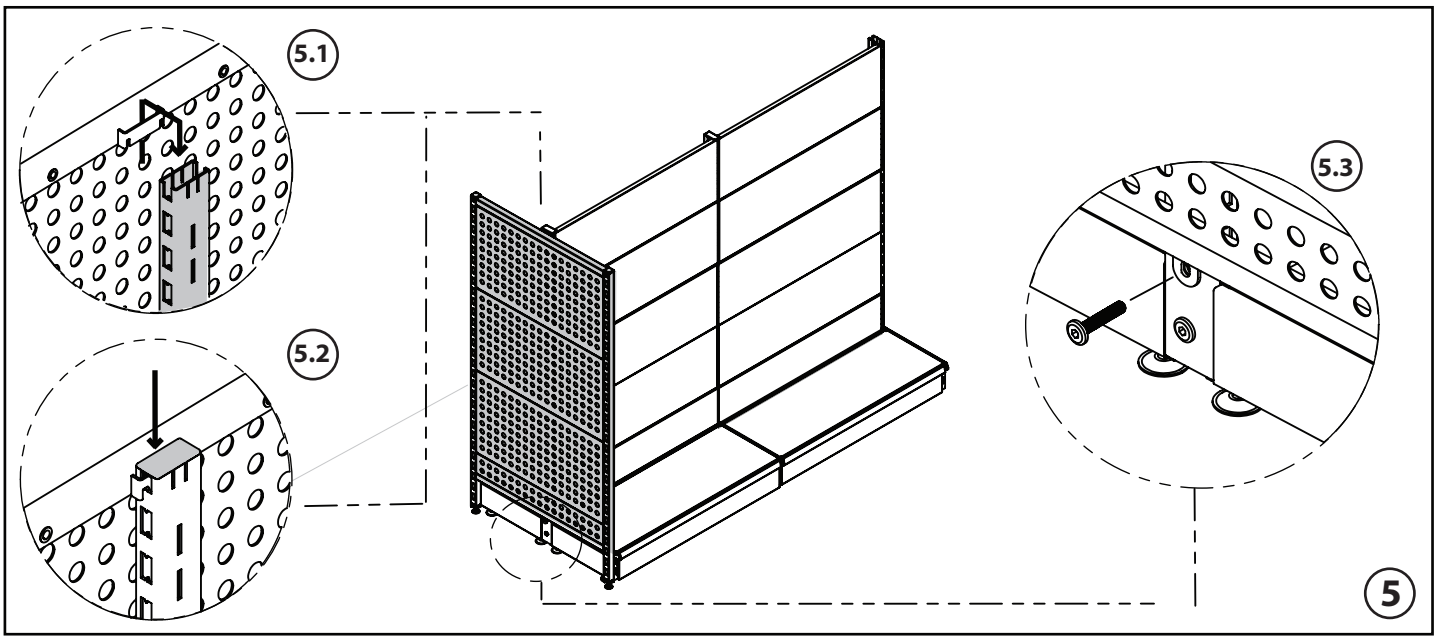

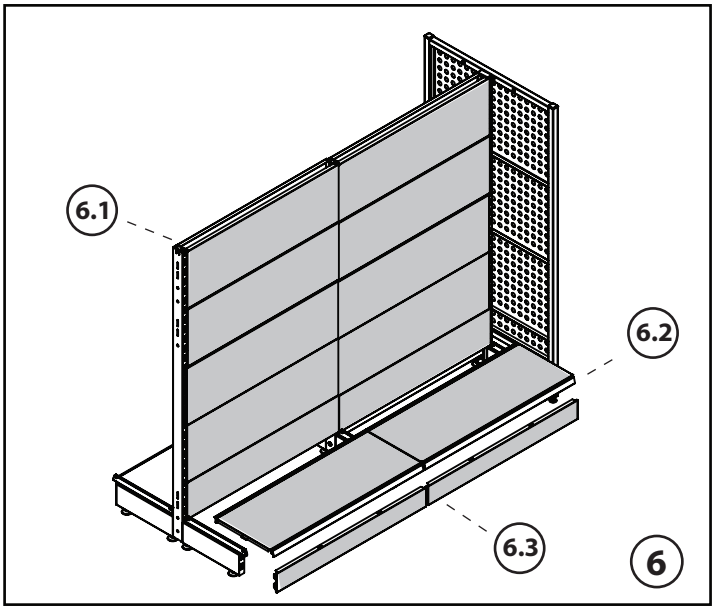

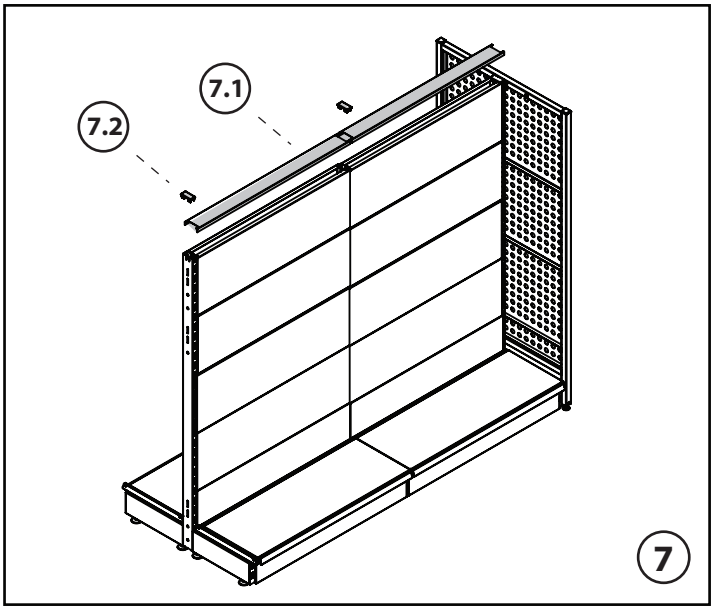

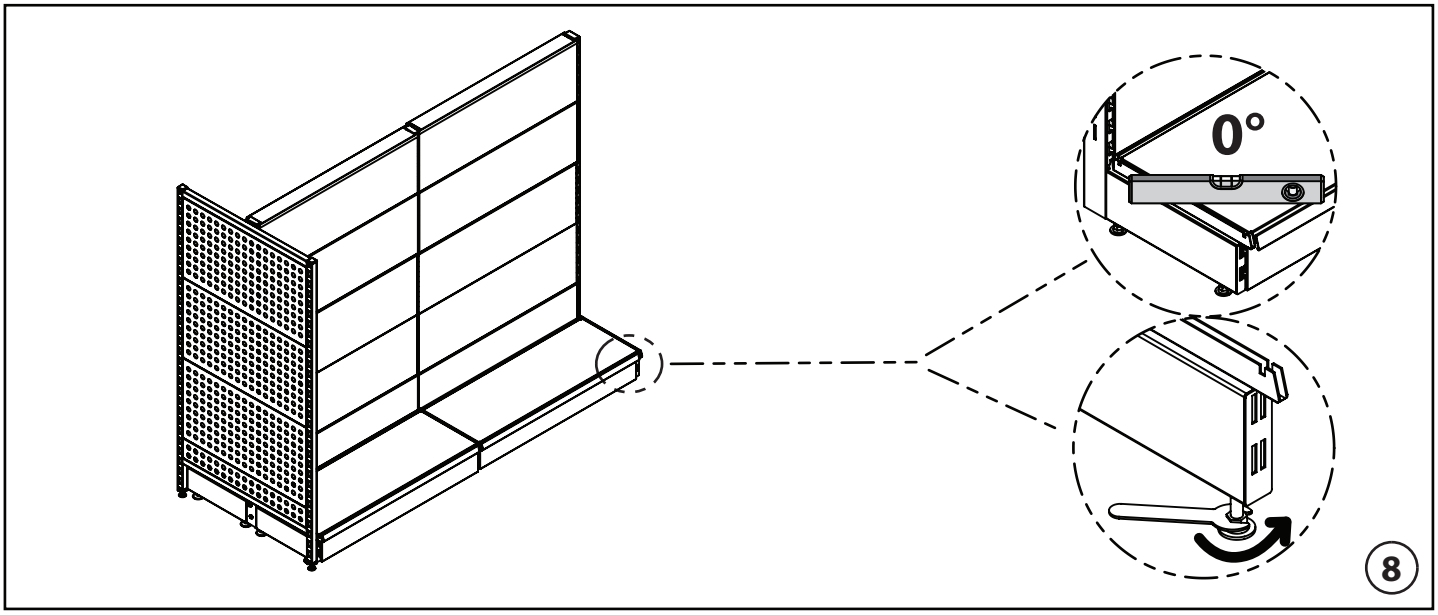

SOLUTIONS IN RETAIL	ASSEMBLY INSTRUCTIONS	DRAWN BY: SI RETAIL	SHEET: 8/16
	TITLE: VERSA CONFIGURATIONS	FILE NAME: -	REVISION: B

CONFIGURATION 7
CORNER BAY

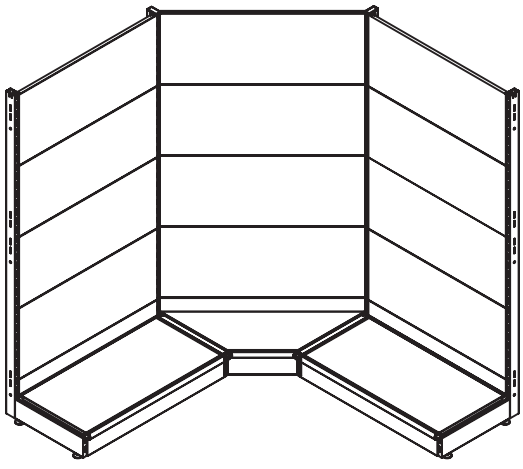

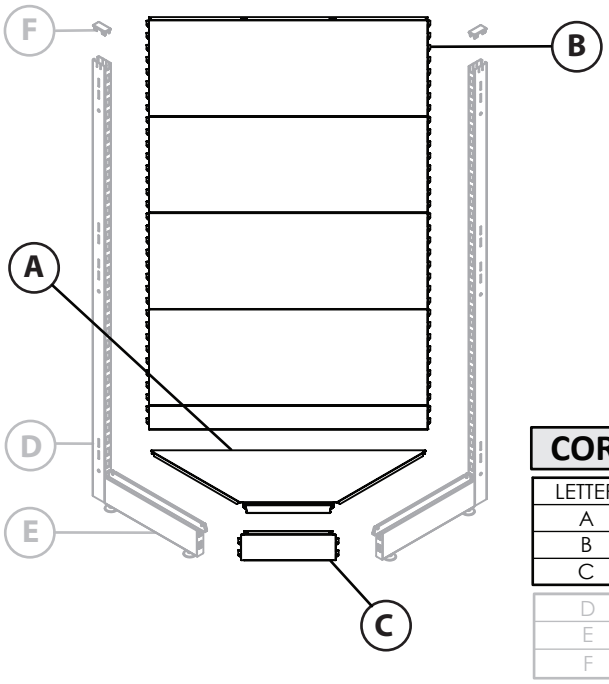

TOOLS REQUIRED:

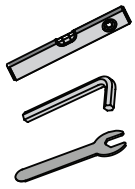

ALL BOLTS WILL BE SUPPLIED

CORNER BAY

LETTER	DESCRIPTION
A	CORNER BASE SHELF
B	BACK PANEL
C	KICK PLATE
D	UPRIGHT
E	FOOT
F	TOP CAP

PLEASE READ THE STEPS BELOW BEFORE COMMENCING ANY ASSEMBLY

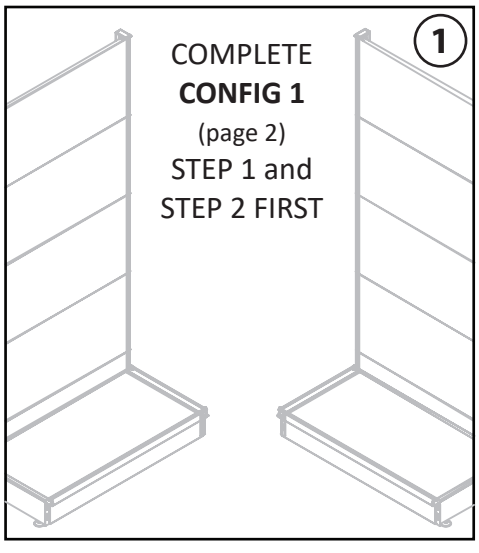

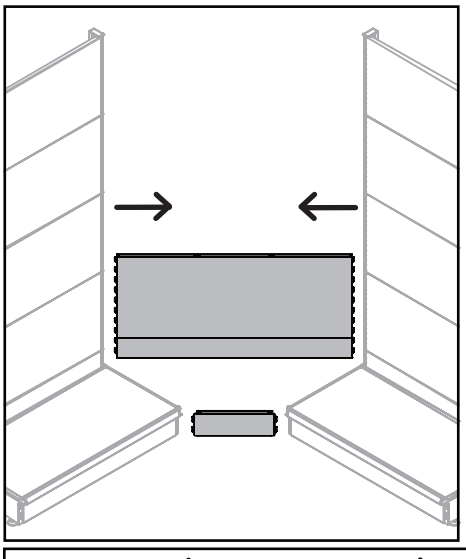

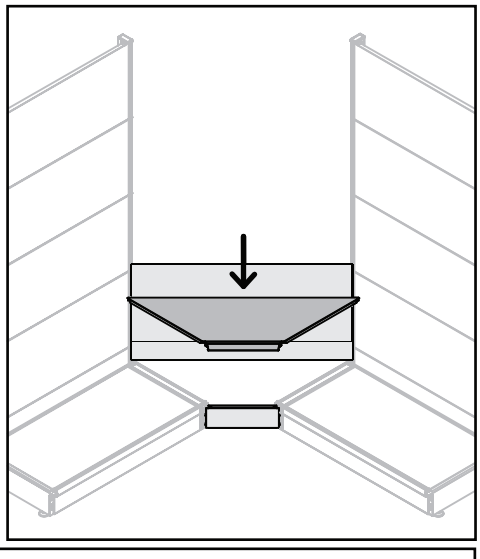

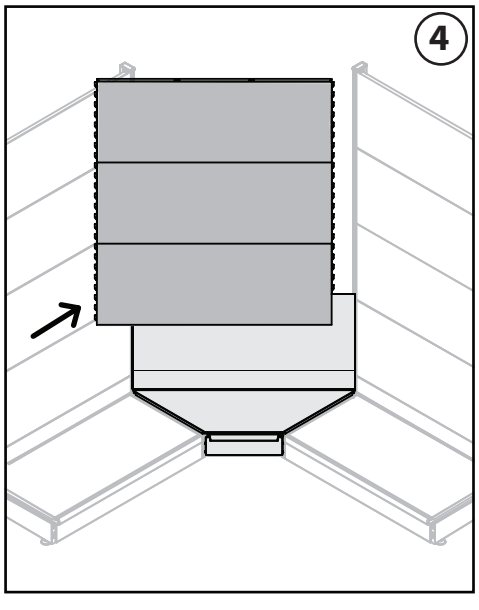

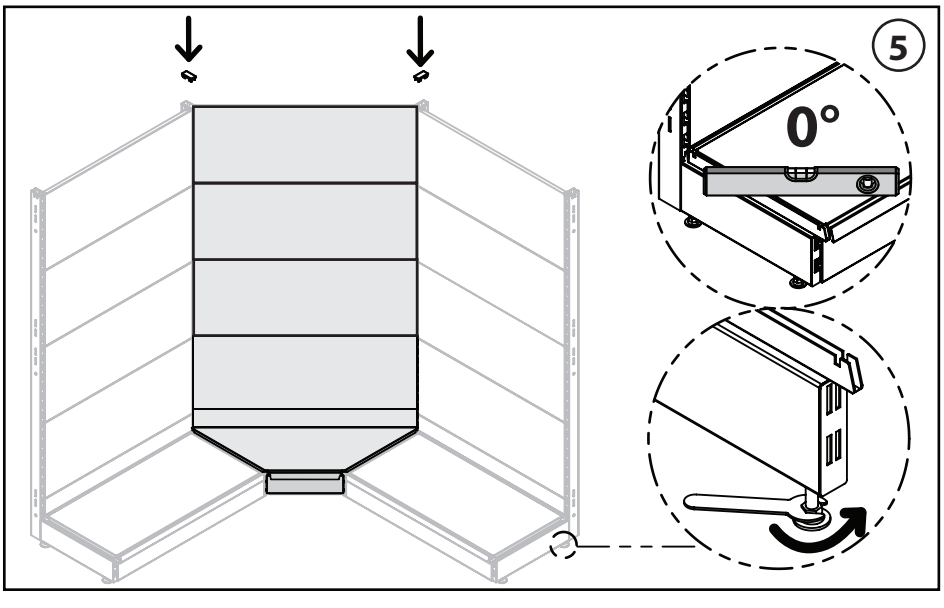

SI retail SOLUTIONS IN RETAIL	ASSEMBLY INSTRUCTIONS	DRAWN BY: SI RETAIL	SHEET: 9/16
	TITLE: VERSA CONFIGURATIONS	FILE NAME: -	REVISION: B

PLEASE READ THE STEPS BELOW BEFORE COMMENCING ANY ASSEMBLY

ACCESSORY 1
TOP CAP SIGN

DOUBLE BAY

LETTER	DESCRIPTION
A	TOP CAP
B	HOLDER
C	BOLT
D	NUT
E	SIGN
F	TOP CAP

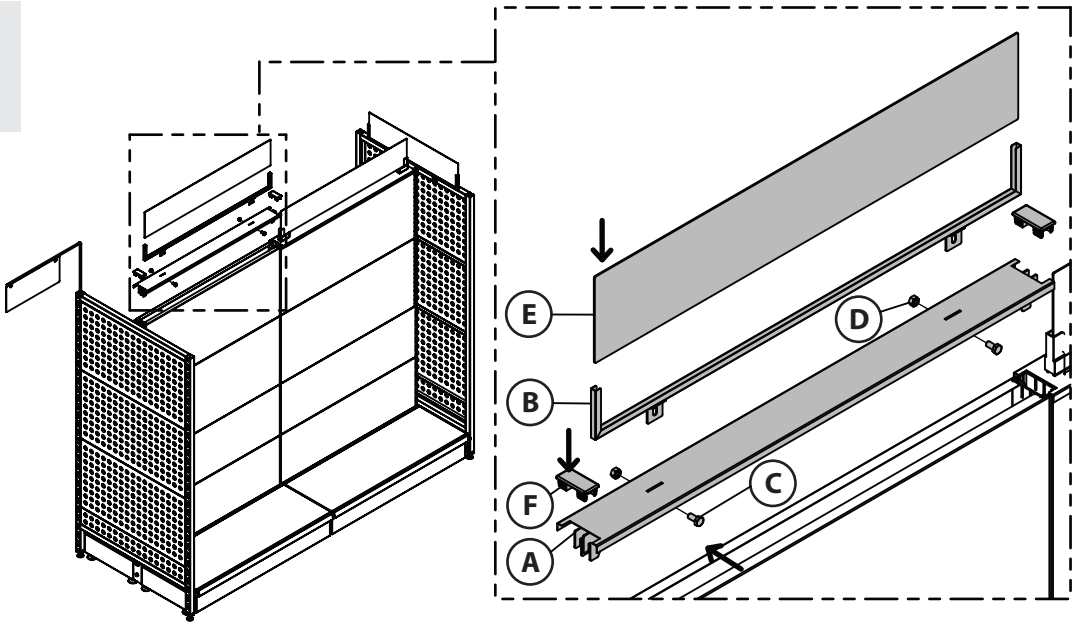

ACCESSORY 2
END CAP SIGN

DOUBLE BAY

LETTER	DESCRIPTION
A	SIGN
B	HOLDER

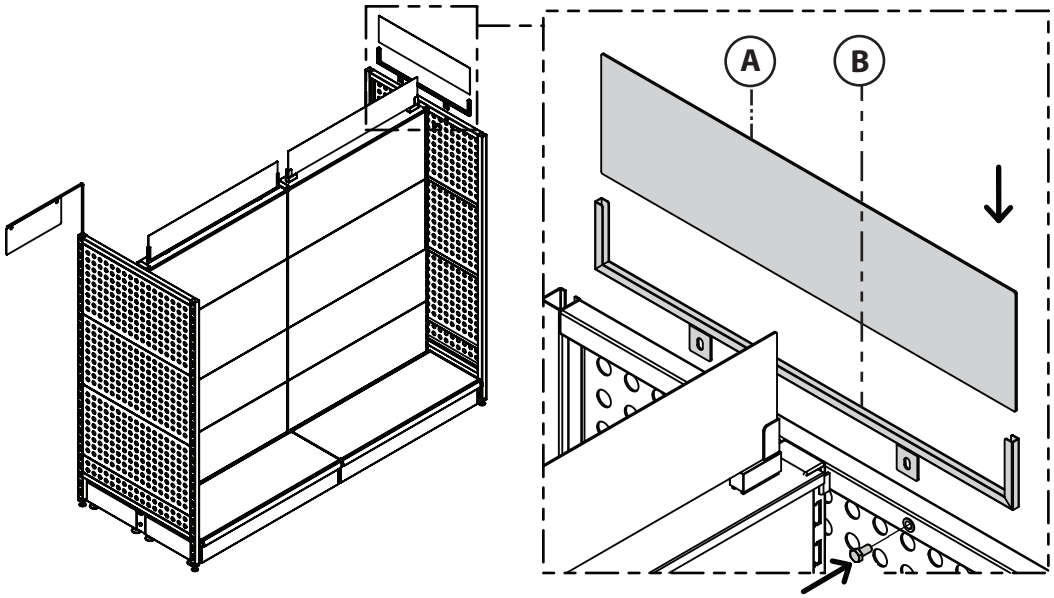

ACCESSORY 3
GRID MESH SIGN

DOUBLE BAY

LETTER	DESCRIPTION
A	SIGN
B	HOLDER

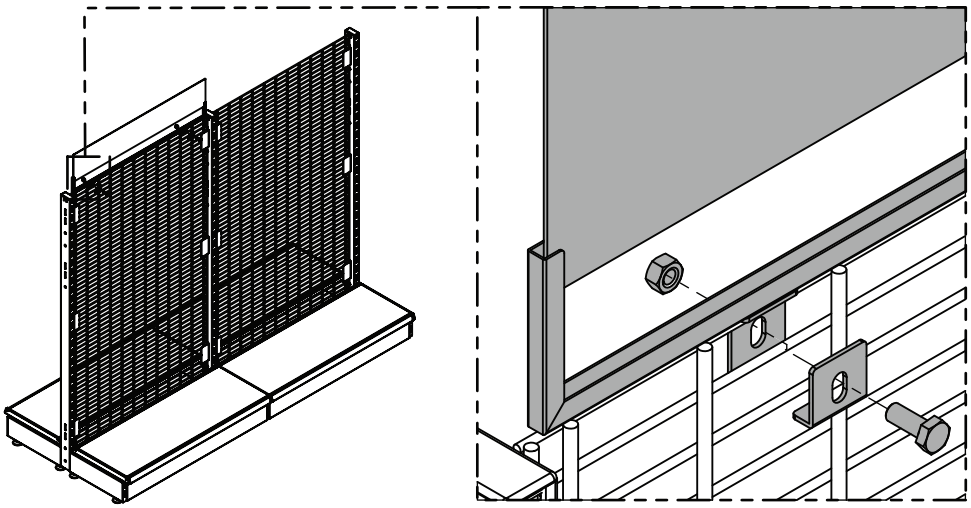

SOLUTIONS IN RETAIL	ASSEMBLY INSTRUCTIONS	DRAWN BY: SI RETAIL	SHEET: 10/16
	TITLE: VERSA CONFIGURATIONS	FILE NAME: -	REVISION: B

PLEASE READ THE STEPS BELOW BEFORE COMMENCING ANY ASSEMBLY

ACCESSORY 4
BULKHEAD SIGN

DOUBLE BAY

LETTER	DESCRIPTION
A	LEFT WING
B	RIGHT WING
C	SIGN

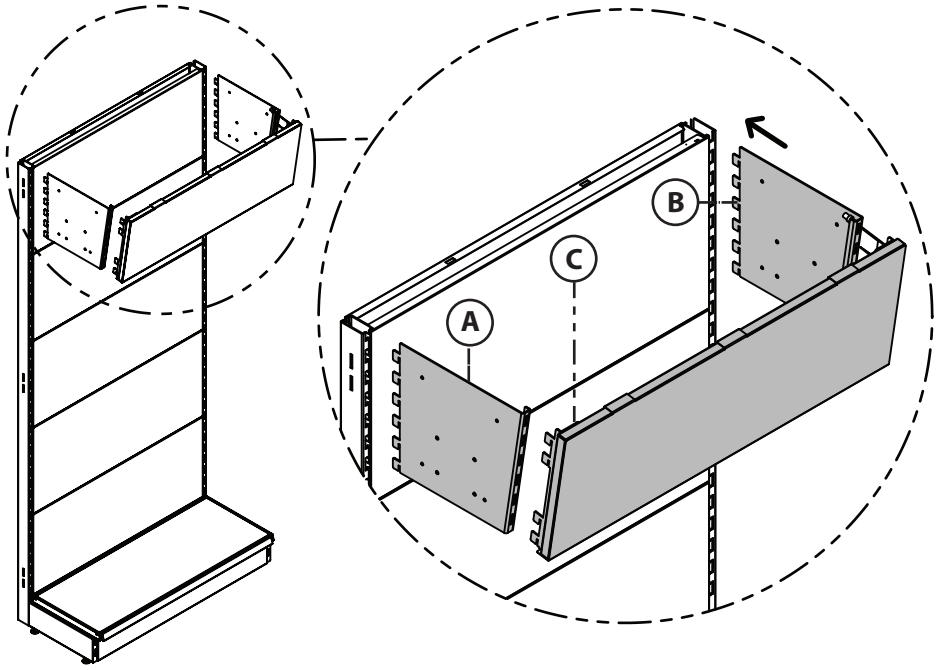

ACCESSORY 5
CATEGORY IDENTIFIER

DOUBLE BAY

LETTER	DESCRIPTION
A	SIGN

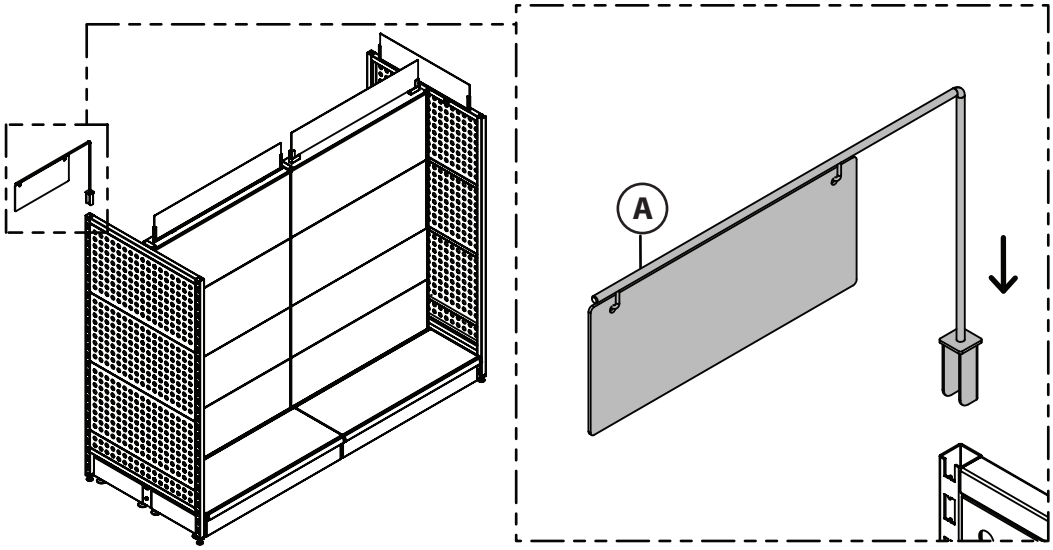

ACCESSORY 6
MAGNETIC SIGN HOLDER

DOUBLE BAY

LETTER	DESCRIPTION
A	SIGN
B	HOLDER

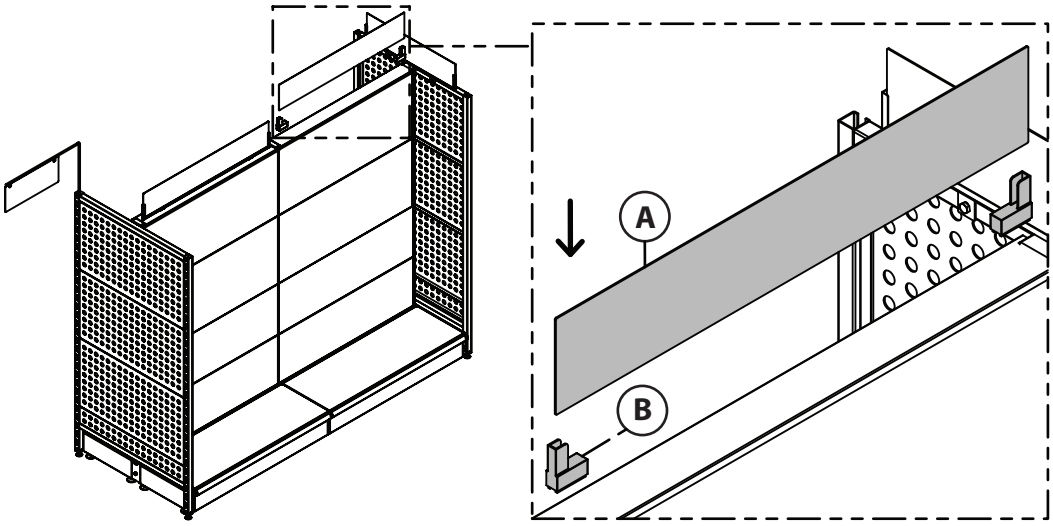

ASSEMBLY INSTRUCTIONS	DRAWN BY: SI RETAIL	SHEET: 11/16
TITLE: VERSA CONFIGURATIONS	FILE NAME: -	REVISION: B

Maximum Weight Loading and Fixing

1. Overview and Definitions for Maximum Weight Loadings and Fixing.

Product: VERSA Shelving Systems

- The Uniformly Distributed Loading (UDL) is defined by the load being evenly distributed across an individual shelf, as well as equally shared across multiple levels of shelving.
- All Wall Mounted Shelving (single sided) with heights of 2100mm and above are to be secured to the wall utilising the GD-V-WFB Wall Bracket or similar solution. 2400mm heights require 2x GD-V-WFB Wall Bracket or similar solution. Refer to CONFIGURATION 3 in Versa Assembly Instructions.
- GD-V-WFB Wall Bracket (or similar solution) to be positioned within 100mm from the top of the post (any Height). If 2400mm height, position 2nd GD-V-WFB Wall Bracket 600mm down from first bracket. Refer to CONFIGURATION 3 in Versa Assembly Instructions.
- You must ensure the means of fixing and walls are able to safely absorb and transfer the resulting loads. It is the responsibility of the End User to determine if this requires certification by engineer or other appropriate persons.
- To achieve UDL, ensure that all shelving brackets are properly fitted. The shelf also must not be subjected to impact loads.
- For double sided gondolas the same maximum loads can be applied to both sides of the gondola provided all bays are level prior to load being applied, refer to CONFIGURATION 4 in versa instruction manual.
- Note: Shelving and Base loads have independent UDL ratings and must be treated separate in calculating overall UDL rating. See table 1 and Table 2 below. Overall UDL calculations and formula as provided on Table 3.

2. UDL Maximum Load per Shelf on Brackets & Shelf on Base in KG

Product: VERSA Shelving Systems

Table. 1

Recommended UDL Maximum Load per Shelf on Brackets in KG										
Bracket Type		2 Lug Bracket STD					3 Lug Bracket STD			3 Lug Bracket HD
										
Shelf Depth in mm		200	250	300	370	470	350	400	450	570
Shelving Widths (axis Spacing) in mm	600	130	120	110	100	90	105	100	90	150
	900 | 914	130	120	110	100	90	105	100	90	150
	1200	130	120	110	100	90	105	100	90	150

Table. 2

Recommended UDL Maximum Load per Base Shelf on Base Foot in KG									
Base Foot Type (Height in mm)		Base Foot 160mm & 260mm							
									
Shelf Depth in mm		250	300	350	370	400	450	470	570
Shelving Widths (axis Spacing) in mm	600	180	200	220	230	250	270	290	350
	900 | 914	160	180	190	200	220	250	290	310
	1200	125	140	150	155	180	210	260	270

3. UDL Maximum Load per Wall Mounted or Freestanding Shelving

Product: VERSA Shelving Systems

Table. 3

Permissible total load (kg) per bay (Excluding base shelf)							
Total Maximum height of upright 2410mm *	Permissible total load in KG for an average depth as calculated in Image A. *Note: Refer to table below for minimum depth of base shelf depth.*						
Average Depth (mm)	≤ 250	≤ 300	≤ 350	≤ 370	≤ 400	≤ 450	≤ 470
Min. Base Shelf Depth (mm)	350	350	400	470	450	570	570
60x30mm Post (kg)	300	280	260	250	230	210	200
80x30mm Post (kg)	440	430	410	400	380	360	350

* Maximum permissible load is only valid for Single Sided Shelving Display if Upright posts are secured to wall, noting requirements as mentioned in Section 1 of this document.

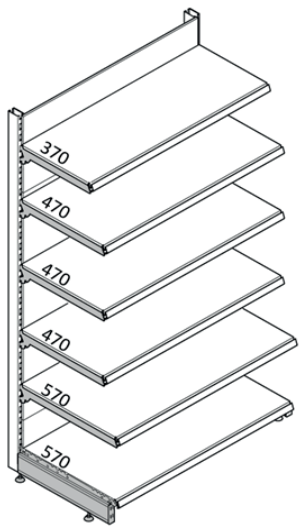

Image. A

Calculation of the average depth:
The average depth is calculated from the sum of the depths of all shelves in mm (not including the base shelf) divided by the number of shelves

Example:
Sum of all shelves not including base leg shelf:
370 + 470 + 470 + 470 + 570 = 2350

Number of shelves not including base shelf = 5
(2350 / 5) = 470mm + Base shelf of 570mm required

Note: If the calculated Average depth does not match one of the Average Depths as shown in Table 3, round up to the next shelf size.
(e.g. 420mm round up to 450mm).

4. Quick Reference Guide

Product: VERSA Shelving Systems

Total Maximum height of upright ≤ 2410mm *
* Single Side Must be affixed to suitable wall using GD-V-WFB
or similar per full recommendations document.

60x30mm Upright Post

Base mm:	350	370	400	450	470	570
UDL KG:	190	200	220	250	290	310

Shelf Depth mm	350	370	400	450	470	570
UDL Average KG per Level						
3 levels	87	83	77	70	67	50
4 Levels	65	63	58	53	50	38
5 Levels	52	50	46	42	40	30
6 Levels	43	42	38	35	33	25

80x30mm Upright Post

Base mm:	350	370	400	450	470	570
UDL KG:	190	200	220	250	290	310

Shelf Depth mm	350	370	400	450	470	570
UDL Average KG per Level						
3 Levels	105	100	100	90	90	100
4 Levels	103	100	95	90	88	75
5 Levels	82	80	76	72	70	60
6 Levels	68	67	63	60	58	50

5. Maximum Weight Loads and Fixing for the End Caps

Product: VERSA End Cap

- The Uniformly Distributed Loading (UDL) is defined by the load being evenly distributed across the entire shelving, as well as equally shared across multiple levels of shelving.

Table. 4

Maximum UDL total (kg) VERSA End Cap with shelving						
Height mm	**1210**	**1410**	**1510**	**1810**	**2110**	**2410**
Widths mm	**600, 740, 914**					
Average Shelf Depth mm	**200, 250, 300, 350**					
Total Weight Kg	130	130	130	150	150	150

Due to Counter Leaver Effect, it is not recommended the shelving depth exceed 350mm for End Caps.

6. Connecting Adjoining Double Sided Bay Fitted with Volcano, Slat Wall or Flat Metal Panel

Product: VERSA End Cap

- The maximum UDL in Table. 5 can only be achieved if the adjoining Double Sided Bay is fitted with Tie-Bars. Refer to Image B below.

Image. B

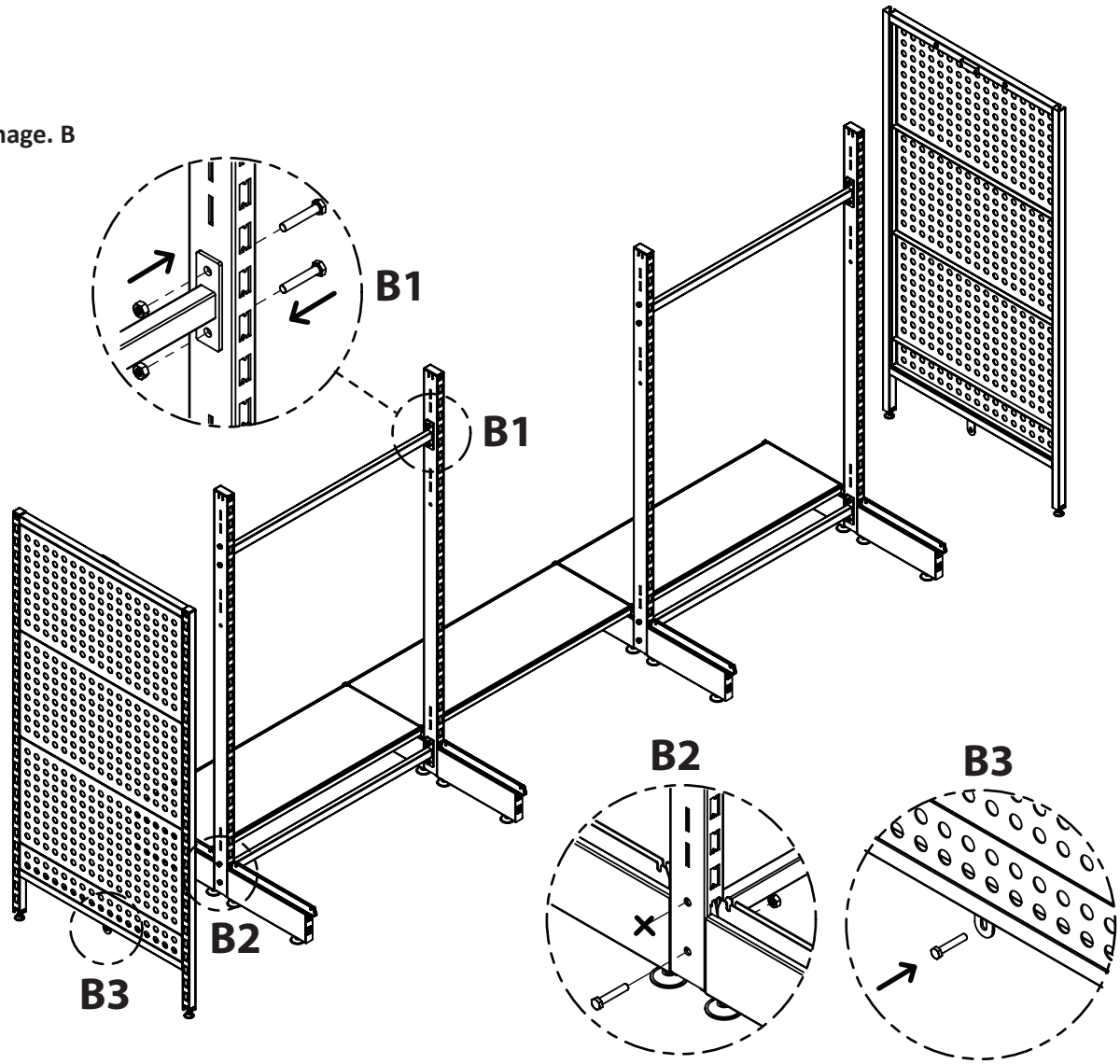

- Only the Bays directly adjoining the End Cap require the Tie Bars. (Refer to CONFIGURATION 5 in Versa Assembly Instructions)
- 2x Tie Bars heights up to 1710mm for adjoining bay
- 3x Tie Bars for heights 1810mm for adjoining bay
- End Cap to be secured to adjoining post via top mount bracket + Bttom Bolt via Tie Bars (Image B3).

7. Connecting to Adjoining Double Sided Bay with Wire Mesh Panel

Product: VERSA End Cap

- The maximum UDL in Table. 5 can only be achieved if the adjoining Mesh Double Sided Bays are fitted with the supplied Locking Pins to secure the Mesh Panel. Refer to **Image C**

Image. C

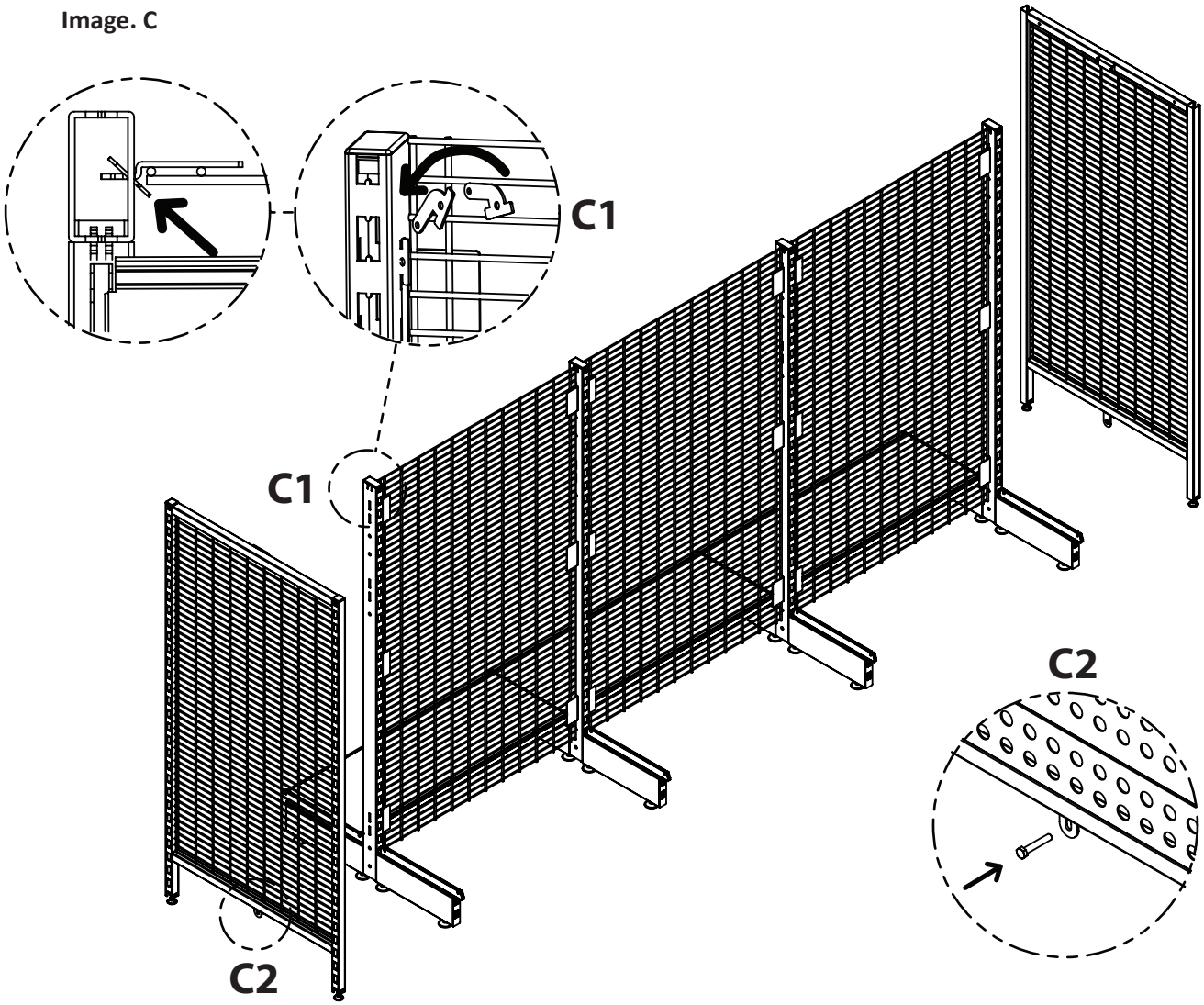

- All Mesh Panels are required to have the supplied locking pins inserted, irrespective if End Caps are being used or not. (Refer to CONFIGURATION 2 in Versa Assembly Instructions for full breakdown)
- 4x Locking Pins supplied for mesh heights up to 1510mm for adjoining bay
- 6x Locking Pins supplied for mesh heights above 1810mm for a joining bay.
- End Cap to be secured to adjoining post via top mount bracket + Bottom Bolt - refer to image C2.